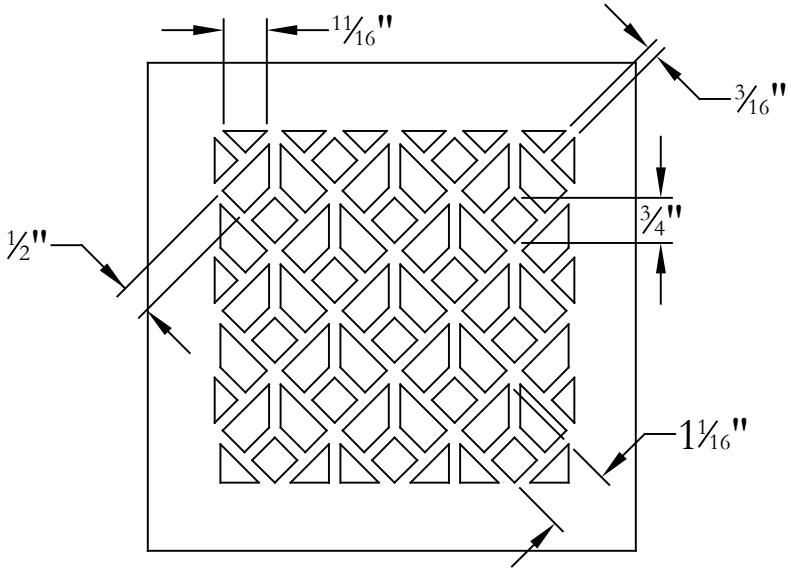

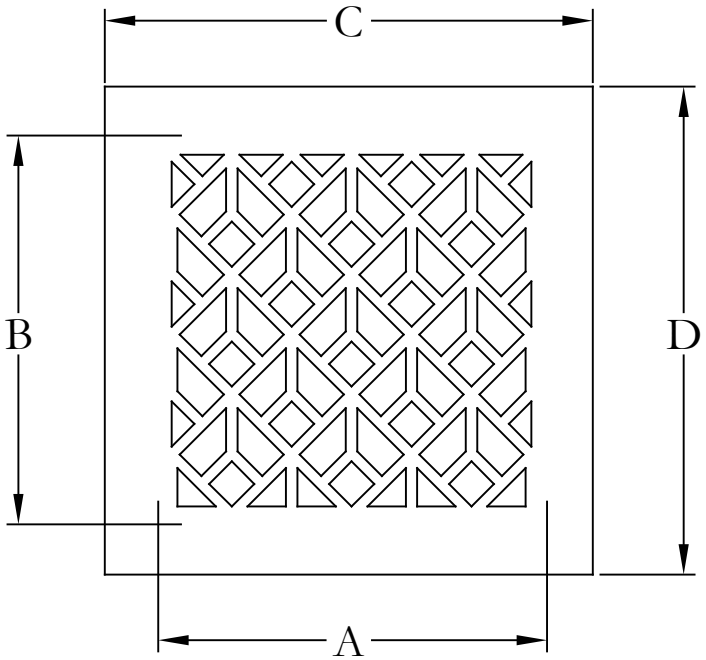

PROJECT NAME/REQUIRMENTS				
NAME:				
MATERIAL TYPE:				
MATERIAL THICKNESS:				
PRODUCT FINISH:				
	DUCT OPENING		OVERALL SIZE	
QTY.	DIM. A	DIM. B	DIM. C	DIM. D
NOTES:				

NOTE: DESIGN IS TYPICALLY .75-INCH SMALLER THAN DUCT OPENING, AS SHOWN ABOVE

SteelCrest
INTELLIGENT DESIGN

DESIGN #55

(57% OPEN)

ALL DIMENSIONS ARE IN INCHES

THE INFORMATION CONTAINED IN THIS DRAWING IS THE SOLE PROPERTY OF STEELCREST CORPORATION. ANY REPRODUCTION INPART OR AS A WHOLE WITHOUT WRITTEN PERMISSION OF STEELCREST CORPORATION IS PROHIBITED